RM-1- ELECTRIC HOOK UP

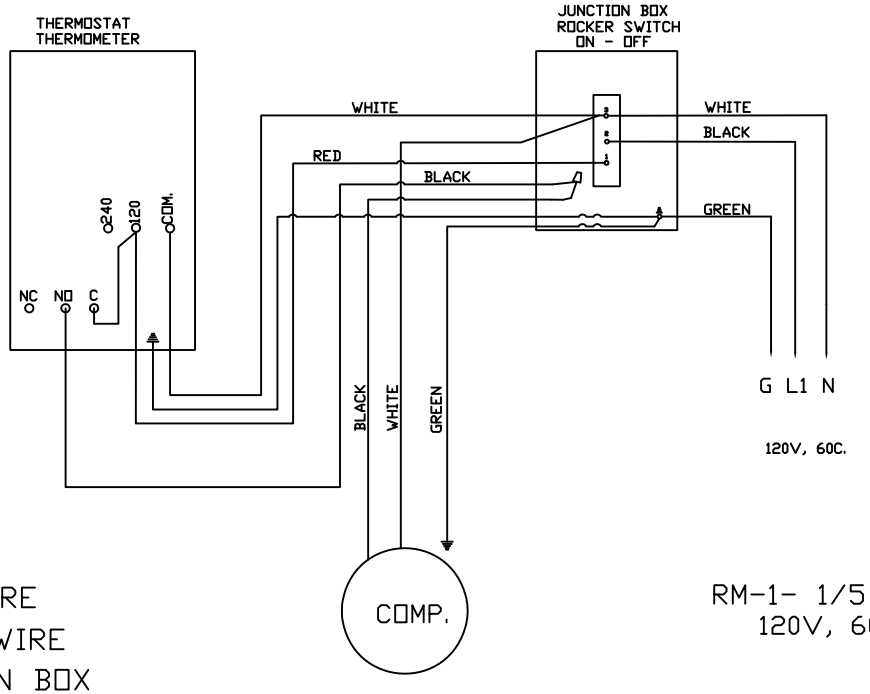

RM-1-
WIRE NUT TOGETHER BLACK WIRE
FROM THERMOSTAT TO BLACK WIRE
FROM COMPRESSOR IN JUNCTION BOX

RM-1- 1/5 H.P.
120V, 60C.

These plans are the exclusive property of Atlas Metal Industries Inc. Any unautorized use without written consent of Atlas Metal Industries Inc., is strictly prohibited.

ATLAS METAL INDUSTRIES, INC.
1135 NW 159TH DRIVE MIAMI, FLORIDA 33169

REVISION CHANGES	
DATE:	DESCRIPTION:

DATE: 03-28-00
DRAWN BY: MHA
CHECKED BY: N.SANZ

RM-1 ELECTRICAL SCHEMATIC
120VOLTS (1) PHASE

DRAWING No. RM-1 ELECTRICAL SCHEMATIC
SCALE 3/4"=1'
SHEET NO. 1 of 1